Accelero TWIN TURBO III

Height Restriction Drawing

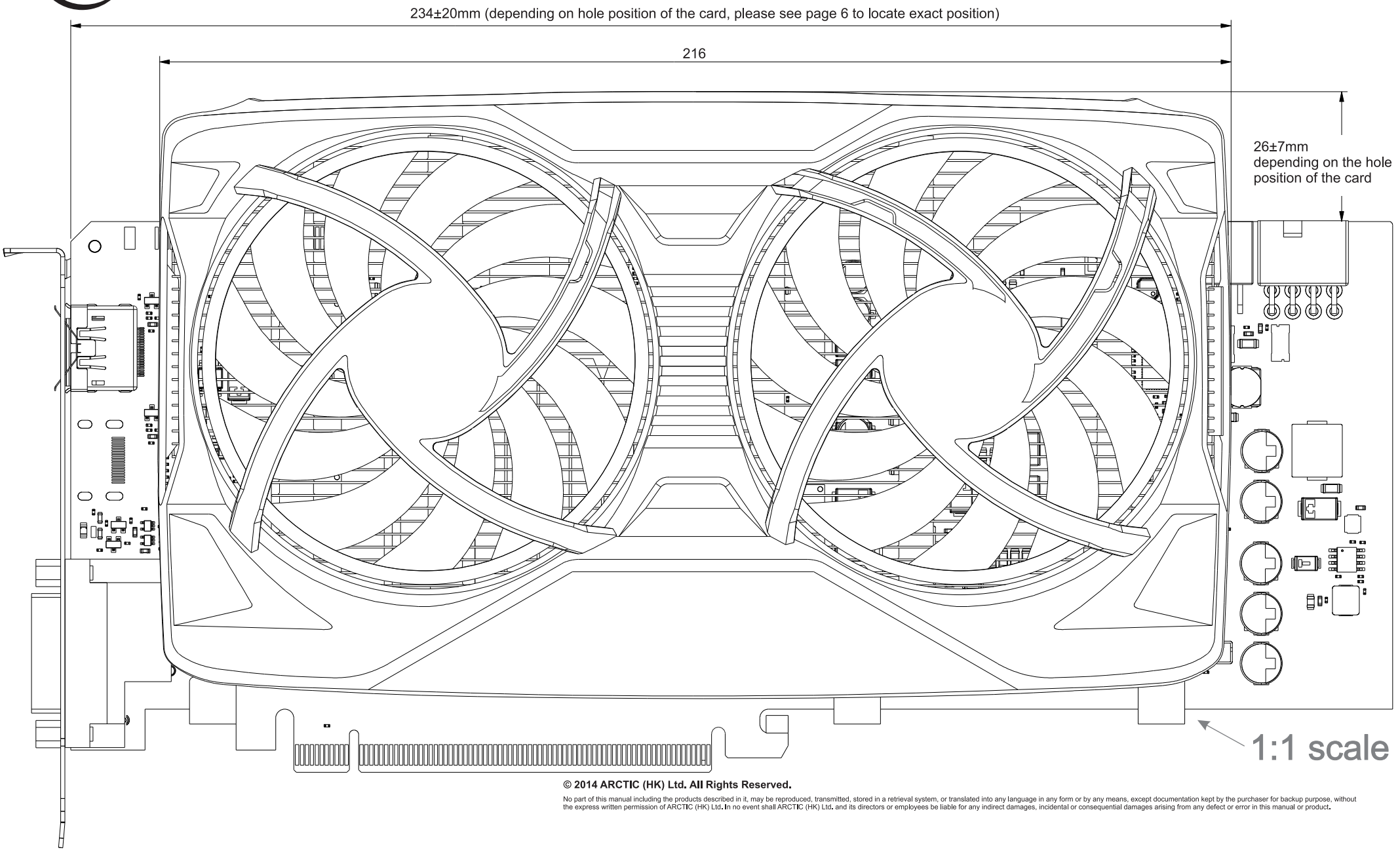

© 2014 ARCTIC (HK) Ltd. All Rights Reserved.

No part of this manual including the products described in it, may be reproduced, transmitted, stored in a retrieval system, or translated into any language in any form or by any means, except documentation kept by the purchaser for backup purpose, without the express written permission of ARCTIC (HK) Ltd. In no event shall ARCTIC (HK) Ltd. and its directors or employees be liable for any indirect damages, incidental or consequential damages arising from any defect or error in this manual or product.

Accelero TWIN TURBO III

Height Restriction Drawing

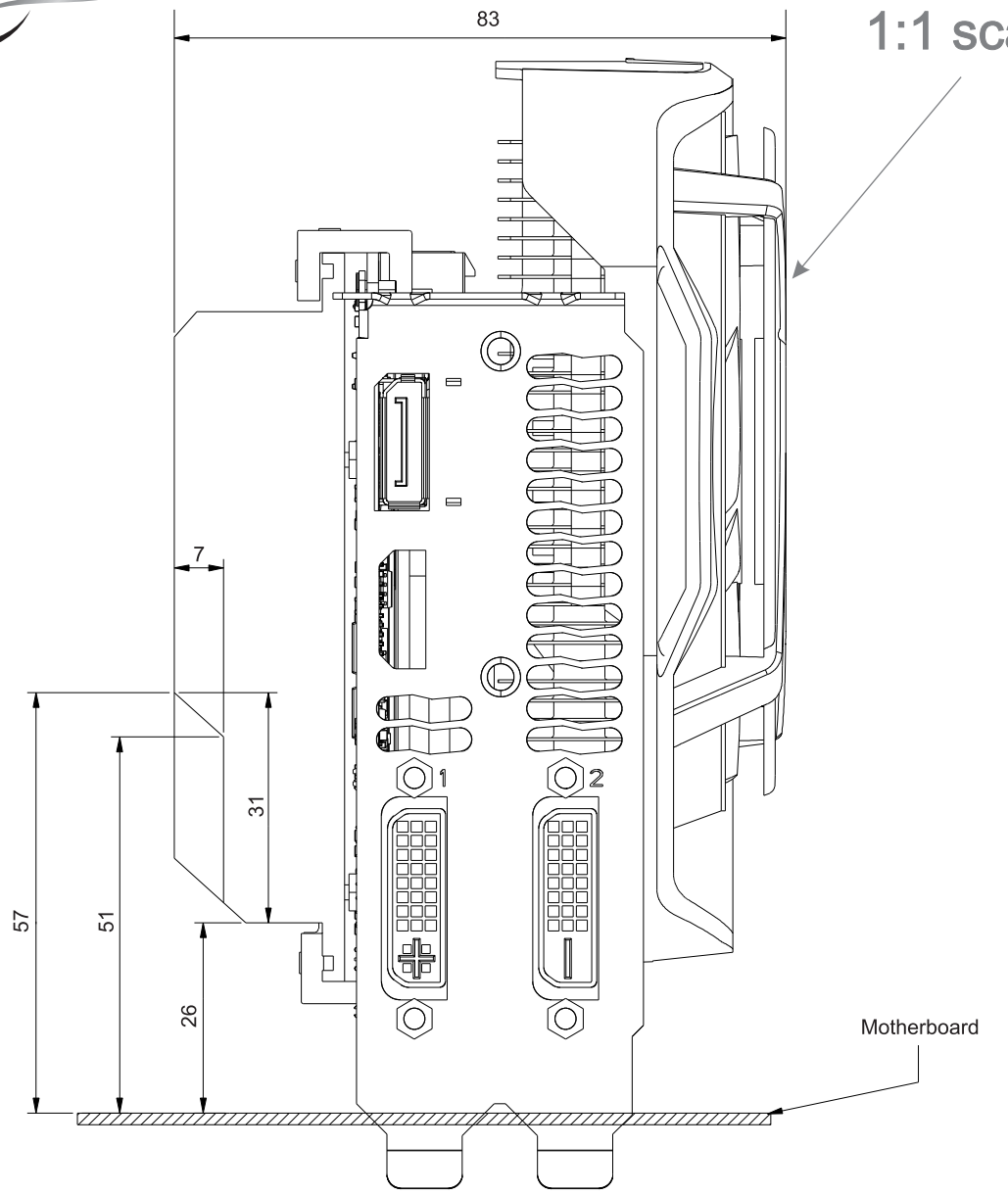

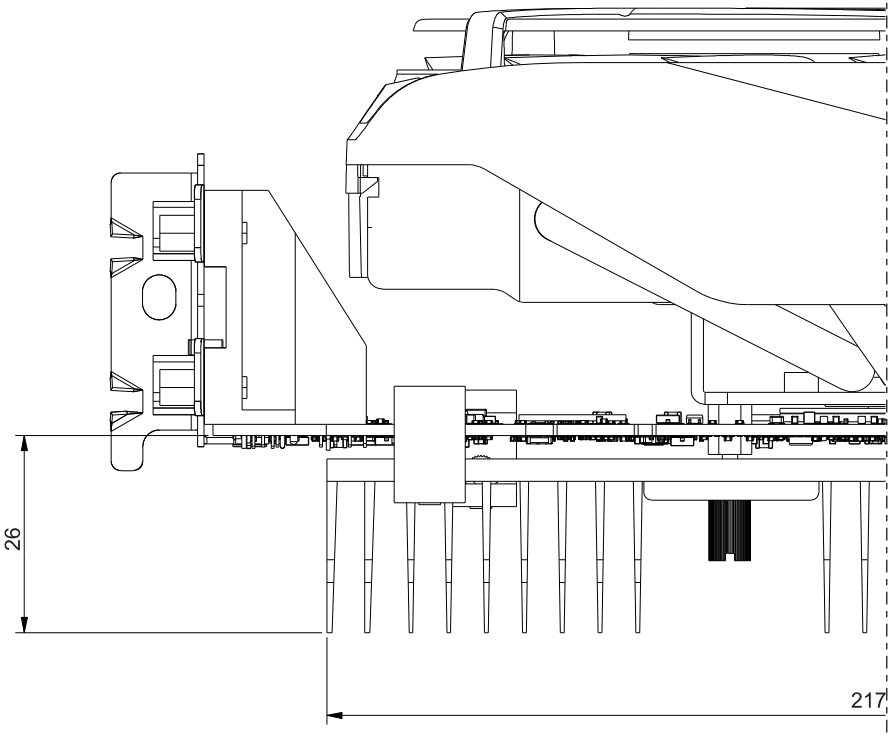

© 2014 ARCTIC (HK) Ltd. All Rights Reserved.

No part of this manual including the products described in it, may be reproduced, transmitted, stored in a retrieval system, or translated into any language in any form or by any means, except documentation kept by the purchaser for backup purpose, without the express written permission of ARCTIC (HK) Ltd. In no event shall ARCTIC (HK) Ltd. and its directors or employees be liable for any indirect damages, incidental or consequential damages arising from any defect or error in this manual or product.

Accelero TWIN TURBO III

Height Restriction Drawing

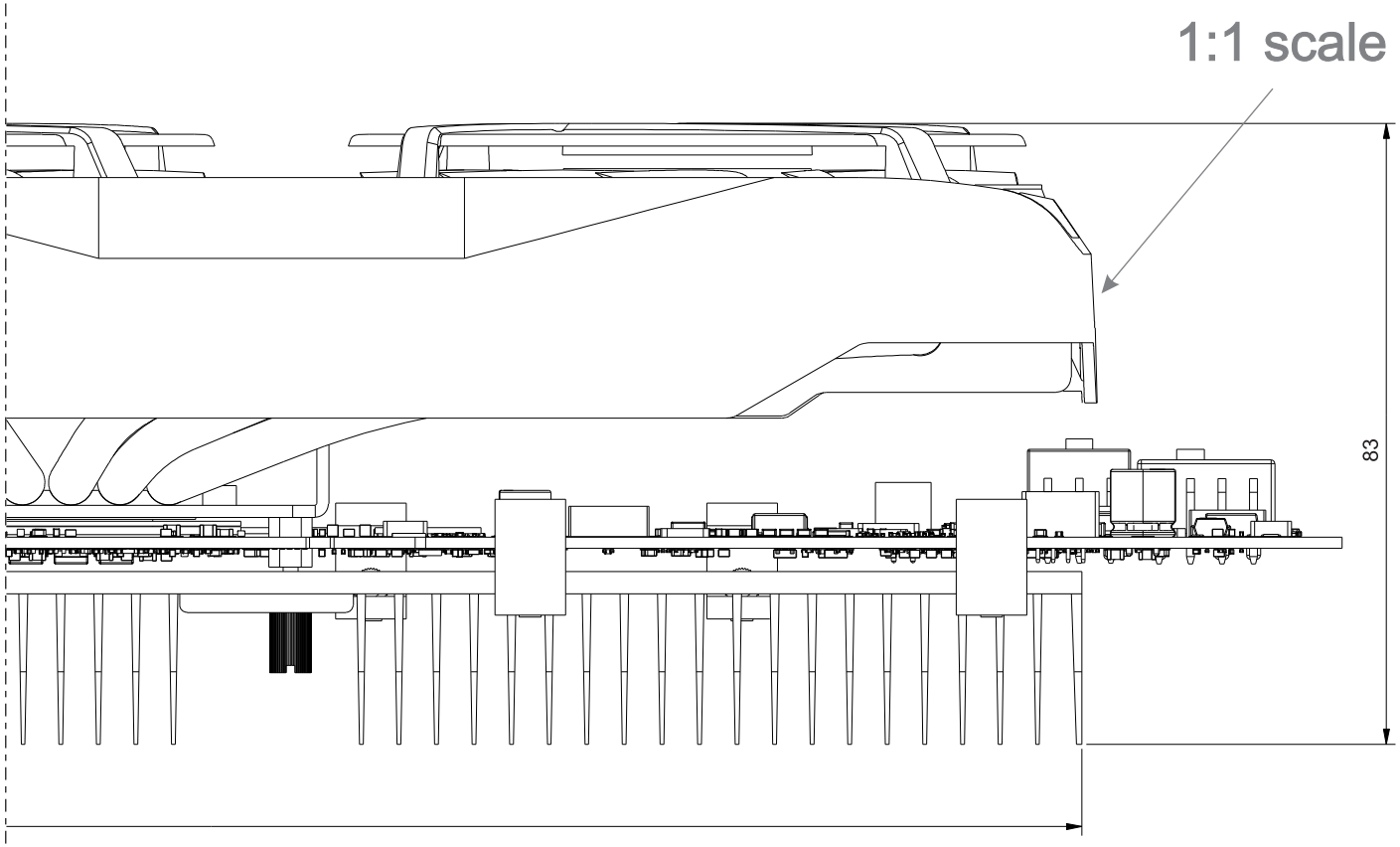

© 2014 ARCTIC (HK) Ltd. All Rights Reserved.

No part of this manual including the products described in it, may be reproduced, transmitted, stored in a retrieval system, or translated into any language in any form or by any means, except documentation kept by the purchaser for backup purpose, without the express written permission of ARCTIC (HK) Ltd. In no event shall ARCTIC (HK) Ltd. and its directors or employees be liable for any indirect damages, incidental or consequential damages arising from any defect or error in this manual or product.

Accelero TWIN TURBO III

Height Restriction Drawing

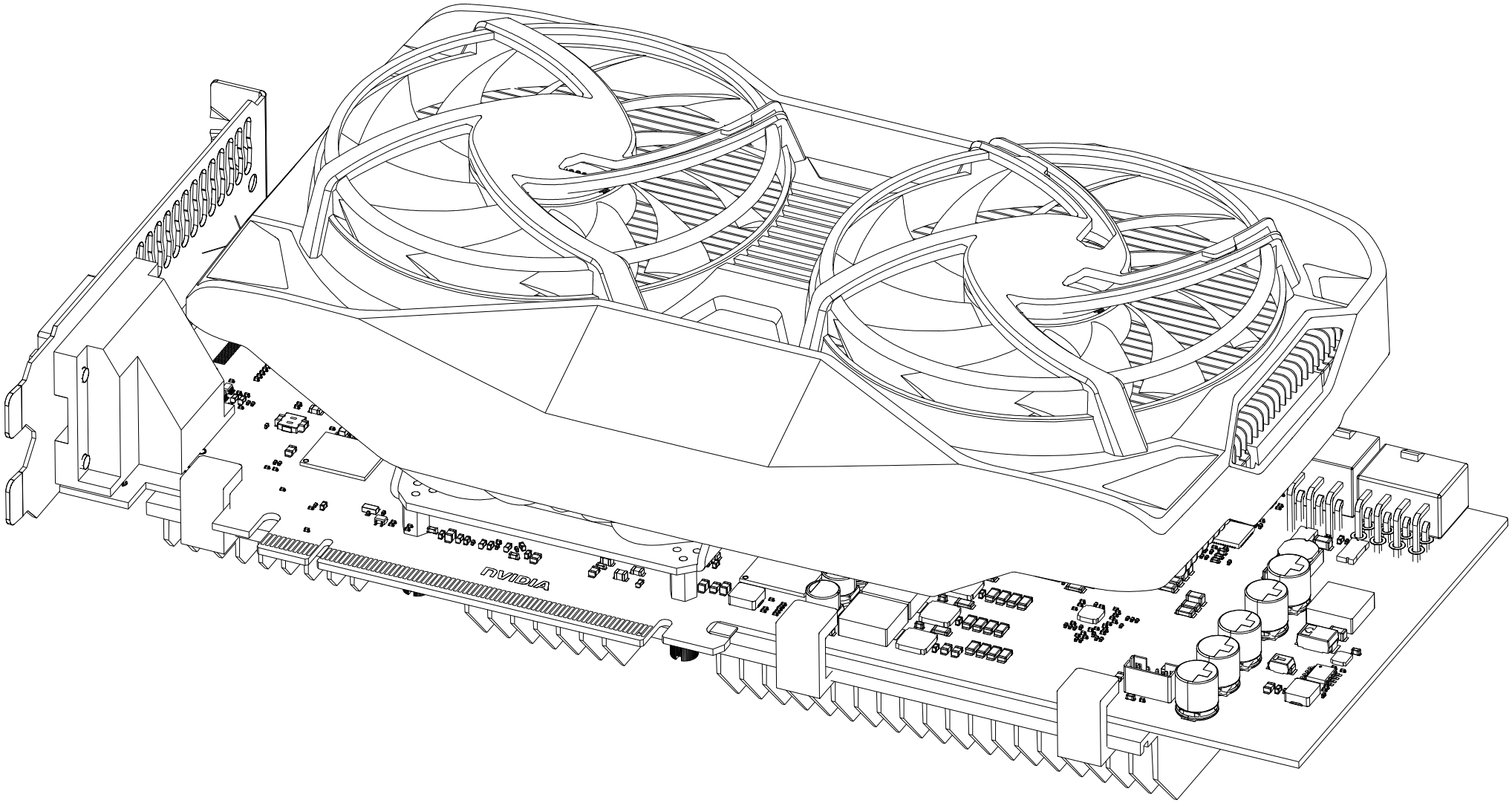

© 2014 ARCTIC (HK) Ltd. All Rights Reserved.

No part of this manual including the products described in it, may be reproduced, transmitted, stored in a retrieval system, or translated into any language in any form or by any means, except documentation kept by the purchaser for backup purpose, without the express written permission of ARCTIC (HK) Ltd. In no event shall ARCTIC (HK) Ltd. and its directors or employees be liable for any indirect damages, incidental or consequential damages arising from any defect or error in this manual or product.

Accelero TWIN TURBO III

Height Restriction Drawing

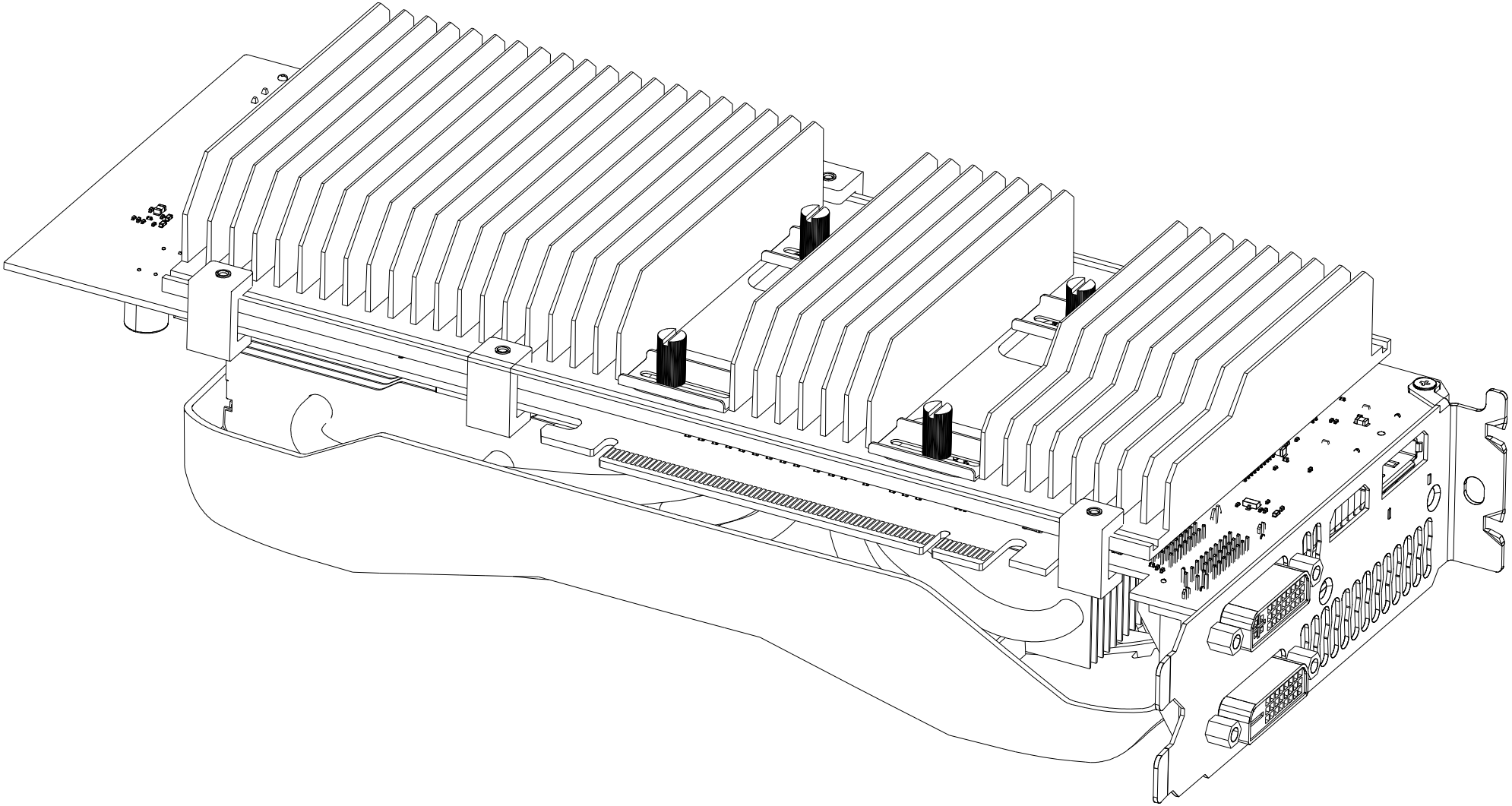

© 2014 ARCTIC (HK) Ltd. All Rights Reserved.

No part of this manual including the products described in it, may be reproduced, transmitted, stored in a retrieval system, or translated into any language in any form or by any means, except documentation kept by the purchaser for backup purpose, without the express written permission of ARCTIC (HK) Ltd. In no event shall ARCTIC (HK) Ltd. and its directors or employees be liable for any indirect damages, incidental or consequential damages arising from any defect or error in this manual or product.

Accelero TWIN TURBO III

Height Restriction Drawing

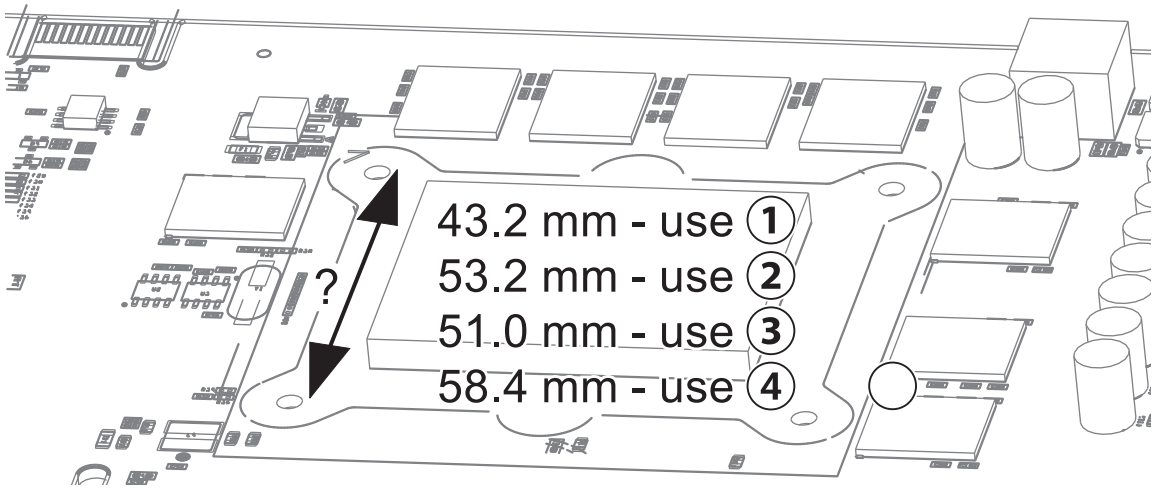

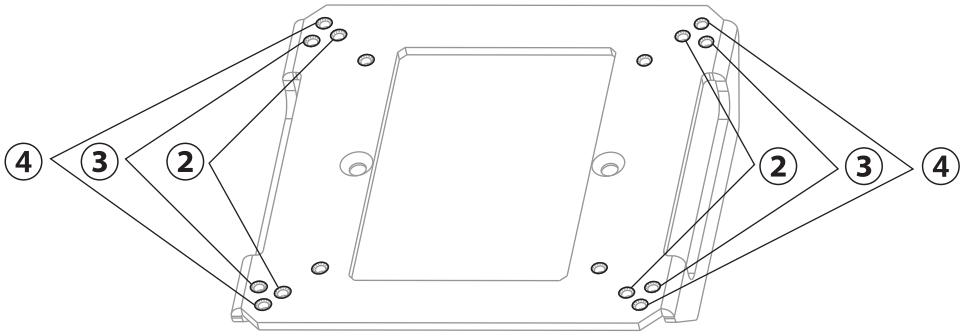

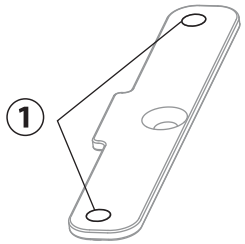

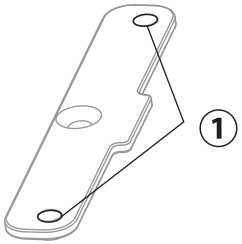

© 2014 ARCTIC (HK) Ltd. All Rights Reserved.

No part of this manual including the products described in it, may be reproduced, transmitted, stored in a retrieval system, or translated into any language in any form or by any means, except documentation kept by the purchaser for backup purpose, without the express written permission of ARCTIC (HK) Ltd. In no event shall ARCTIC (HK) Ltd. and its directors or employees be liable for any indirect damages, incidental or consequential damages arising from any defect or error in this manual or product.

Accelero TWIN TURBO III

Height Restriction Drawing

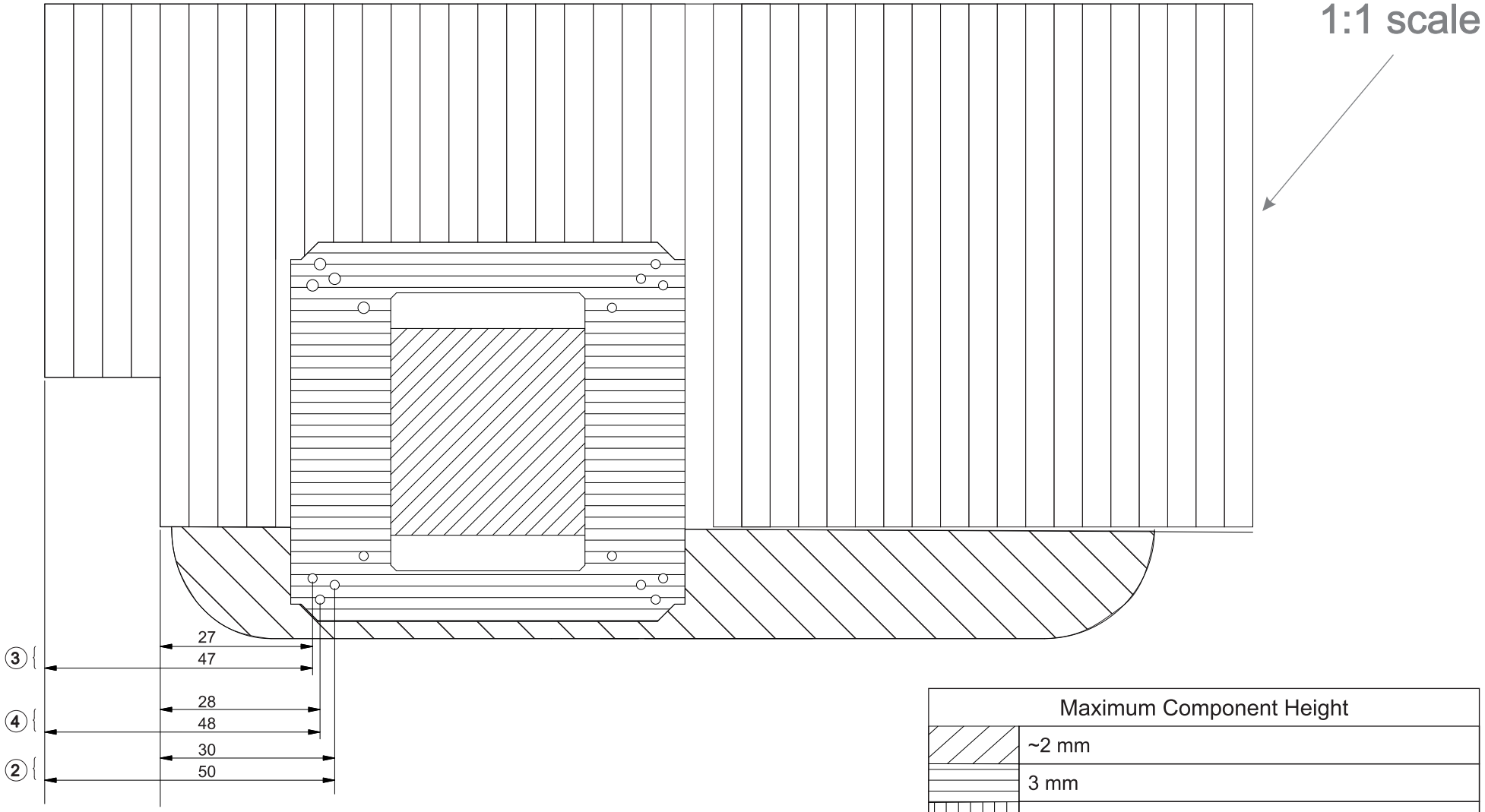

Maximum Component Height	
	~2 mm
	3 mm
	18 mm
	5 mm to 25 mm

© 2014 ARCTIC (HK) Ltd. All Rights Reserved.

No part of this manual including the products described in it, may be reproduced, transmitted, stored in a retrieval system, or translated into any language in any form or by any means, except documentation kept by the purchaser for backup purpose, without the express written permission of ARCTIC (HK) Ltd. In no event shall ARCTIC (HK) Ltd. and its directors or employees be liable for any indirect damages, incidental or consequential damages arising from any defect or error in this manual or product.

Accelero TWIN TURBO III

Height Restriction Drawing

1:1 scale

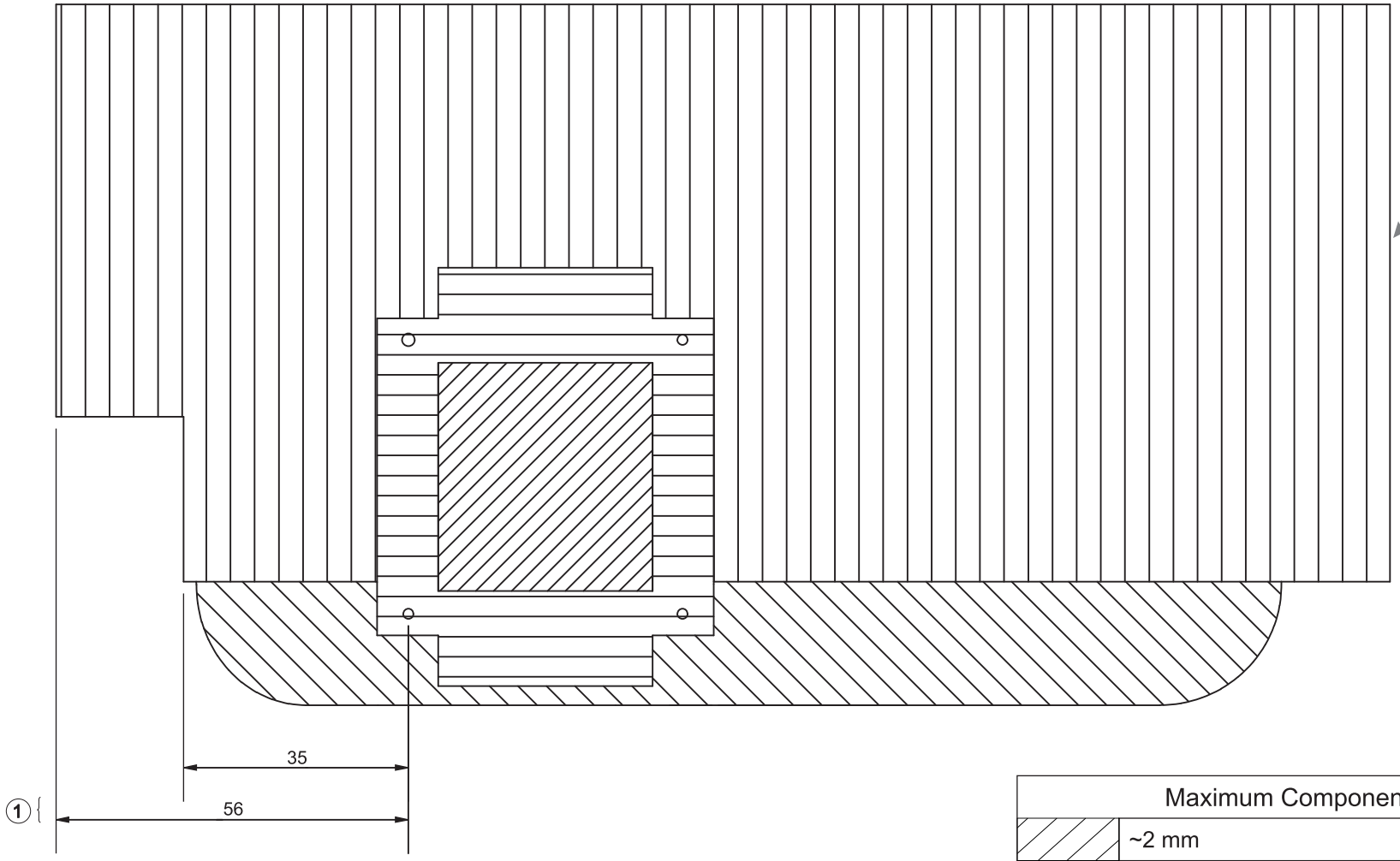

Maximum Component Height	
	~2 mm
	3 mm
	18 mm
	5 mm to 25 mm

© 2014 ARCTIC (HK) Ltd. All Rights Reserved.

No part of this manual including the products described in it, may be reproduced, transmitted, stored in a retrieval system, or translated into any language in any form or by any means, except documentation kept by the purchaser for backup purpose, without the express written permission of ARCTIC (HK) Ltd. In no event shall ARCTIC (HK) Ltd. and its directors or employees be liable for any indirect damages, incidental or consequential damages arising from any defect or error in this manual or product.

Accelero TWIN TURBO III

Height Restriction Drawing

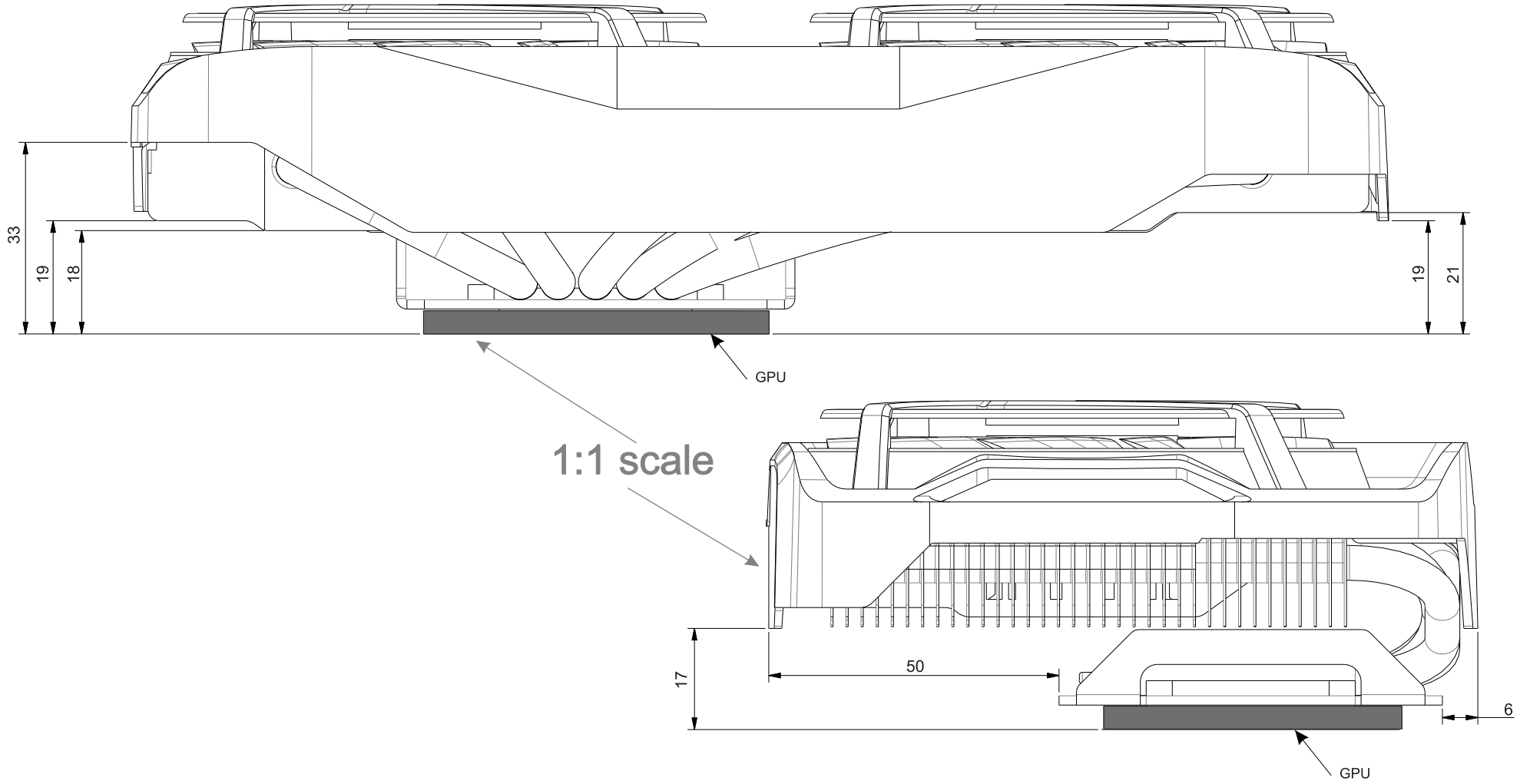

© 2014 ARCTIC (HK) Ltd. All Rights Reserved.

No part of this manual including the products described in it, may be reproduced, transmitted, stored in a retrieval system, or translated into any language in any form or by any means, except documentation kept by the purchaser for backup purpose, without the express written permission of ARCTIC (HK) Ltd. In no event shall ARCTIC (HK) Ltd. and its directors or employees be liable for any indirect damages, incidental or consequential damages arising from any defect or error in this manual or product.